DAB
PUMP PERFORMANCE

KV 32

MULTISTAGE CENTRIFUGAL PUMPS ON A VERTICAL AXIS

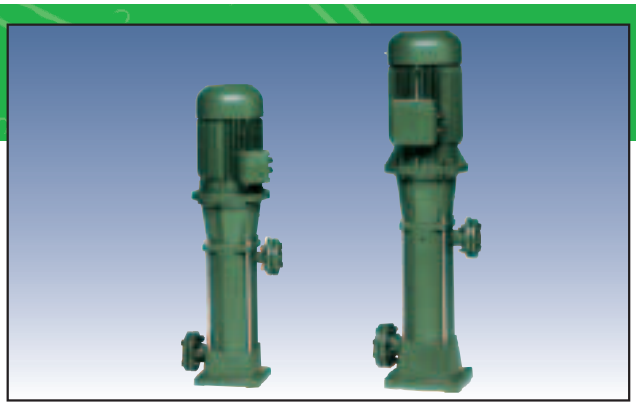

CE

Discharge and suction bodies, motor support and diffuser bodies in cast iron treated against corrosion. Technopolymer impellers and diffusers for KV32.

Protection level: IP 55
Insulation class: F

Pumped liquid characteristics: clean, free from solids or abrasive substances, not viscous, not aggressive, not crystallised and chemically neutral.
Maximum ambient temperature: +40°C

Installation: permanent in a vertical position.

2 POLES

MODEL	ELECTRICAL DATA				
	VOLTAGE 50 Hz	P1 MAX kW	P2 NOMINAL kW	P2 NOMINAL HP	In A
KV 32/5 T	3x400 V ~ Δ*	6,5	5,5	7,5	12

HYDRAULIC DATA

KV 32

2 POLES (2900 r.p.m.)

KV 32

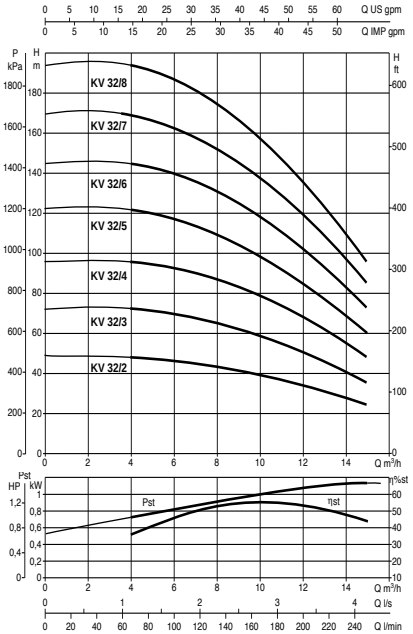

DIMENSIONS AND WEIGHTS

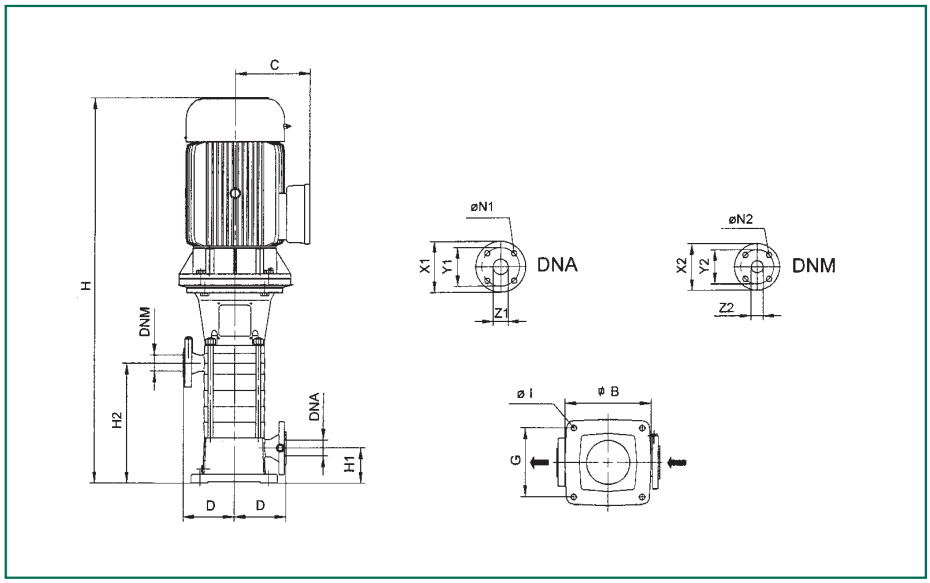

2 POLES

MODEL	B	C	D	G	IØ	H	H1	H2	DNA	DNM	WEIGHT Kg
KV 32/5 T	260	151	160	210	18	919	103	335	40	32	110